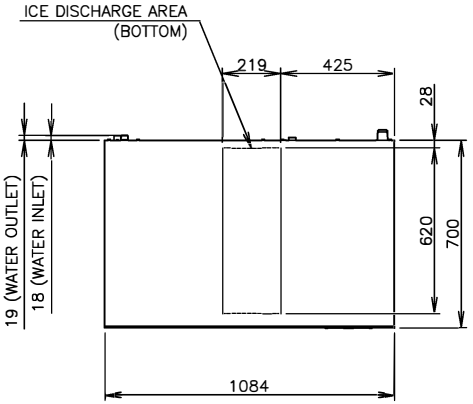
ICE DISCHARGE AREA
(BOTTOM)
219
425
28
19 (WATER OUTLET)
18 (WATER INLET)
620
700
1084

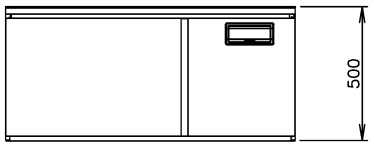
500

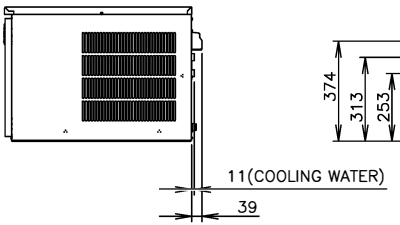
11(COOLING WATER)
39

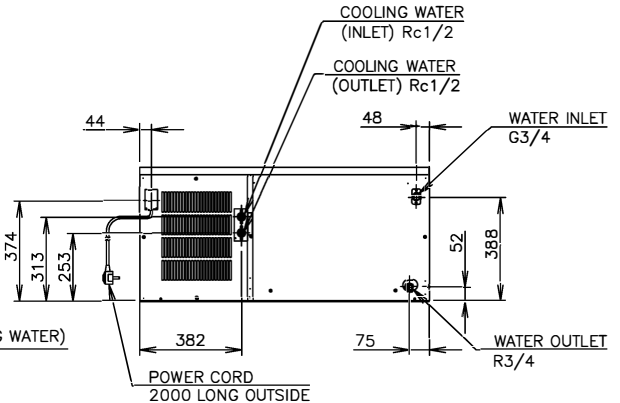
COOLING WATER
(INLET) Rc1/2
COOLING WATER
(OUTLET) Rc1/2
44
48
WATER INLET
G3/4
374
313
253
52
388
382
75
WATER OUTLET
R3/4
POWER CORD
2000 LONG OUTSIDE