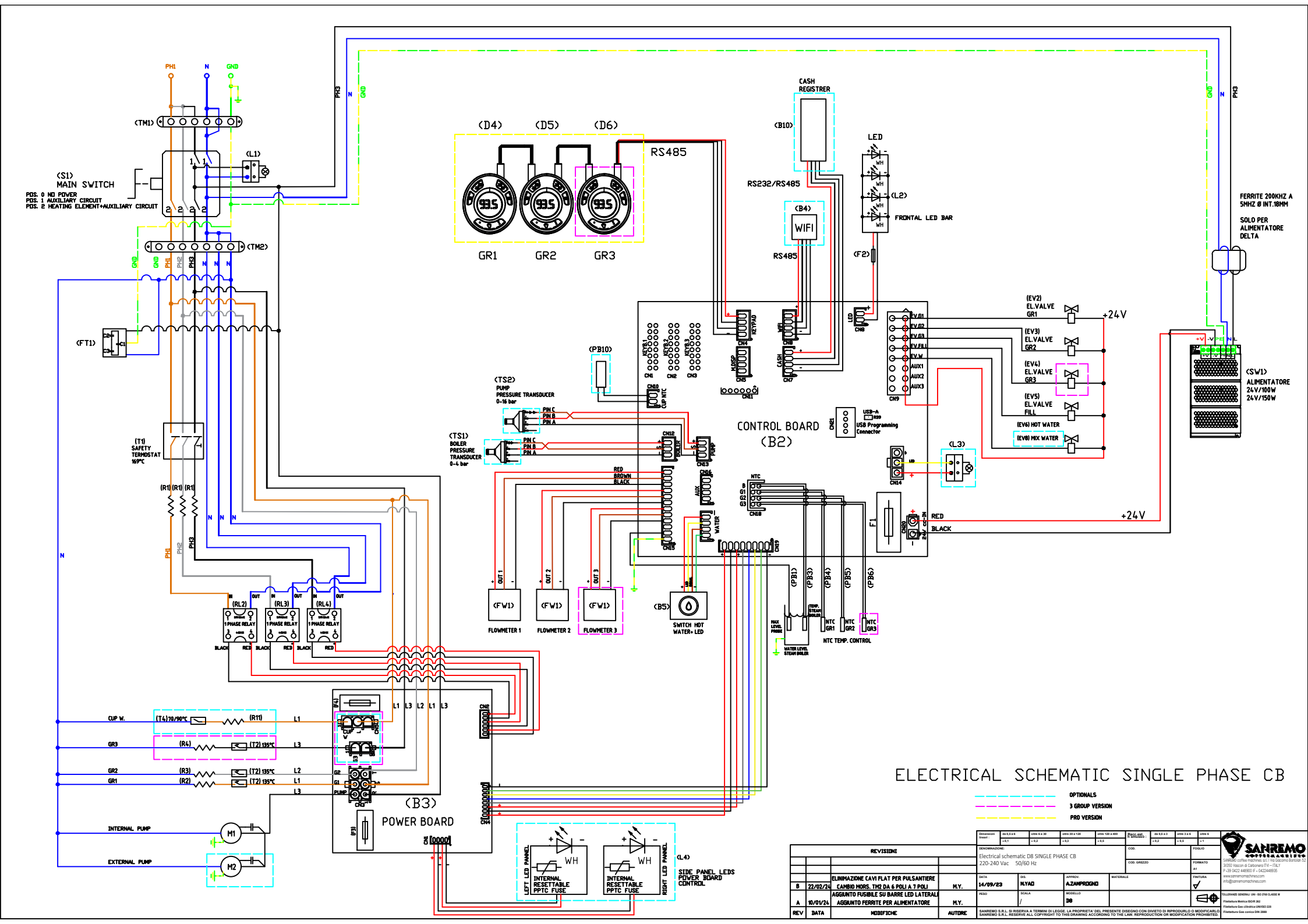
ELECTRICAL SCHEMATIC SINGLE PHASE CB
OPTIONALS
3 GROUP VERSION
PRO VERSION
(S1) MAIN SWITCH
POS. 0 NO POWER
POS. 1 AUXILIARY CIRCUIT
POS. 2 HEATING ELEMENT+AUXILIARY CIRCUIT
(TM1)
(TM2)
(L1)
(FT1)
(T1) SAFETY TERMOSTAT 169°C
(R1)
(RL2) 1 PHASE RELAY
(RL3) 1 PHASE RELAY
(RL4) 1 PHASE RELAY
(D4)
(D5)
(D6)
GR1
GR2
GR3
RS485
CASH REGISTRER
(B10)
RS232/RS485
(B4)
WIFI
LED
(L2)
FRONTAL LED BAR
(F2)
FERRITE 200KHZ A 5MHZ Ø INT.18MM
SOLO PER ALIMENTATORE DELTA
(SW1) ALIMENTATORE 24V/100W 24V/150W
(EV2) EL.VALVE GR1
(EV3) EL.VALVE GR2
(EV4) EL.VALVE GR3
(EV5) EL.VALVE FILL
(EV6) HOT WATER
(EV8) MIX WATER
+24V
CONTROL BOARD (B2)
USB Programming Connector
(PB10)
(TS2) PUMP PRESSURE TRANSDUCER 0-16 bar
(TS1) BOILER PRESSURE TRANSDUCER 0-4 bar
(L3)
(FW1) FLOWMETER 1
(FW1) FLOWMETER 2
(FW1) FLOWMETER 3
(B5) SWITCH HOT WATER+ LED
NTC TEMP. CONTROL
WATER LEVEL STEAM BOILER
CUP W.
GR3
GR2
GR1
INTERNAL PUMP
EXTERNAL PUMP
(B3) POWER BOARD
LEFT LED PANEL
RIGHT LED PANEL
INTERNAL RESETTABLE PPTC FUSE
(L4) SIDE PANEL LEDS POWER BOARD CONTROL
RED
BLACK
BROWN
REVISIONI
B 22/02/24 ELIMINAZIONE CAVI FLAT PER PULSANTIERE CAMBIO MORS. TM2 DA 6 POLI A 7 POLI M.Y.
A 10/01/24 AGGIUNTO FUSIBILE SU BARRE LED LATERALI AGGIUNTO FERRITE PER ALIMENTATORE M.Y.
REV DATA MODIFICHE AUTORE
Electrical schematic D8 SINGLE PHASE CB
220-240 Vac 50/60 Hz
DATA 14/09/23
DIS. M.YAO
APPROV. A.ZAMPROGNO
MODELLO D8
SCALA /
SANREMO COFFEE MACHINES
SANREMO coffee machines srl - Via Giacomo Bortolan 50
31050 Vascon di Carbonera (TV) - ITALY
P.+39 0422 448900 F.+ 0422448935
www.sanremomachines.com
info@sanremomachines.com
SANREMO S.R.L. SI RISERVA A TERMINI DI LEGGE LA PROPRIETA' DEL PRESENTE DISEGNO CON DIVIETO DI RIPRODURLO O MODIFICARLO.
SANREMO S.R.L. RESERVE ALL COPYRIGHT TO THIS DRAWING ACCORDING TO THE LAW. REPRODUCTION OR MODIFICATION PROHIBITED.