OZTIRYAKILER MADENI ESYA SAN. VE TIC. A.S.

Cumhuriyet Mah.Hadımköy Yolu Caddesi No:8 1Nolu Bağımsız Bölüm
Büyükçekmece / İstanbul VD: BüyükMükellefler VKN: 7080013433

Phone.: 00 90 212 8867800 Fax No: 00 90 212 8867809

TAG 370.00 NMV Electrical GN 1/1 Counter Type Refrigerator

79E3.37NMV.00

Specifications of Product:
* GN 1/1 size refrigerated counter with 3 doors
* HACCP digital control panel
* 304 quality stainless steel
* Operating temperature -2 / +8 °C
* Clean-free condenser guarantees high performance at all times
* Maximum internal capacity minimal temperature increase during defrost.
* Most efficient air distribution inside with a specially designed air channel.
* Rounded corners for maximum hygiene
* Marine type legs or swivelling wheels both as an option
* High efficient Mono-block refrigeration system
* Wide magnetic removable gasket with triple indulation area provides an effective seal which reduces heat lost.
* 40-42 Kg/m3 density environment friendly HFC-Free Polyurethane insulation for low energy consumption(60 mm)
* Full frontal water-proof design(IPX5)

Standart Accessory.....: * Plastic coated shelf
Optional Accessory.....: * Wheels
* Stainless steel shelf

Product Dimensions		Package Dimensions	
Length of Product (mm).....	1780	Leght of Package (mm) .....:	750
Width of Product (mm).....	700	Width of Package (mm) .....:	1830
Height of Product (mm) H.....	850	Height of Package (mm).....:	900
Net Weight (Kg).....	177	Volume of Package (m3) .....:	1,23
Gross Weight (Kg)	192	Product Number in Package.....:	1
Volume of Product (m3).....	1,05		
Capacity.....	457 Lt		

OZTIRYAKILER MADENI ESYA SAN. VE TIC. A.S.

Cumhuriyet Mah.Hadımköy Yolu Caddesi No:8 1Nolu Bağımsız Bölüm
Büyükçekmece / İstanbul VD: BüyükMükellefler VKN: 7080013433

Phone.: 00 90 212 8867800 Fax No: 00 90 212 8867809

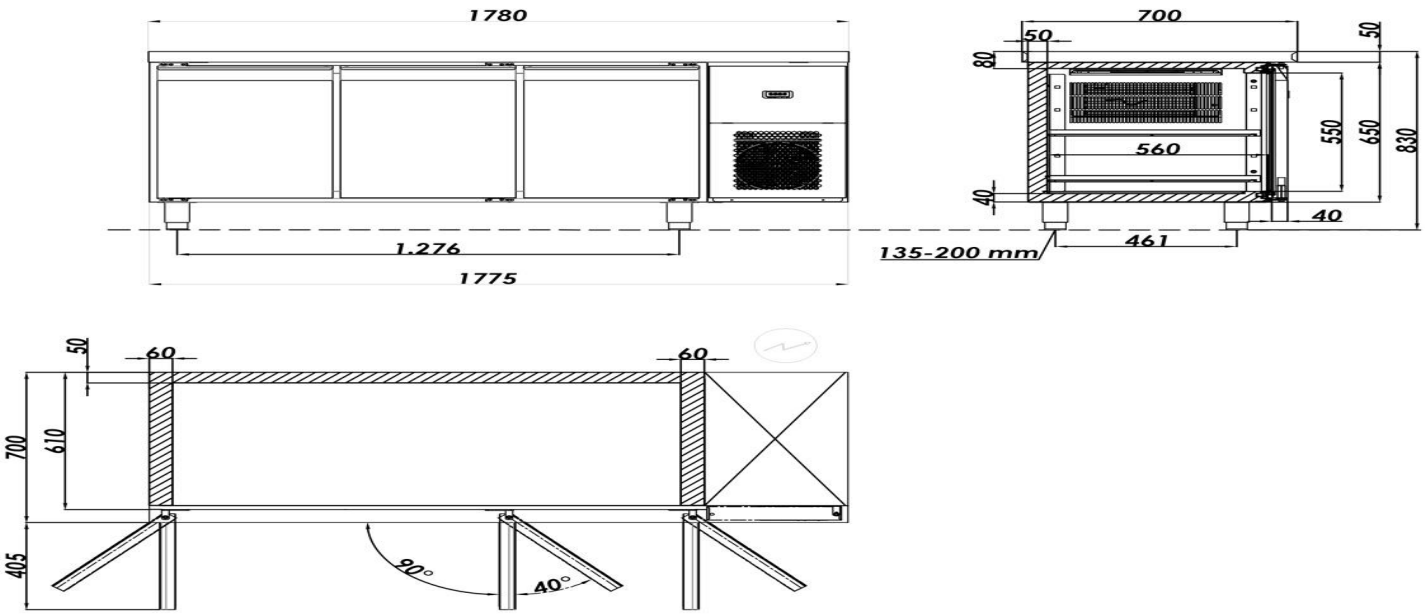

Electrical Specifications

Electrical Power (kW).....: 0,39 kW
Volt (Monophase/Triphase) .....: 220-240 V
Electrical Frequency (Hz).....: 50 Hz

Gas Specifications

Gas Type

Other Technical Specifications

Cooling Gas.....:R134a - 168gr

Max Noise (dBA) .....: 60
Protection Class.....: IP21