VIDIMA NEXT

VIDIMA

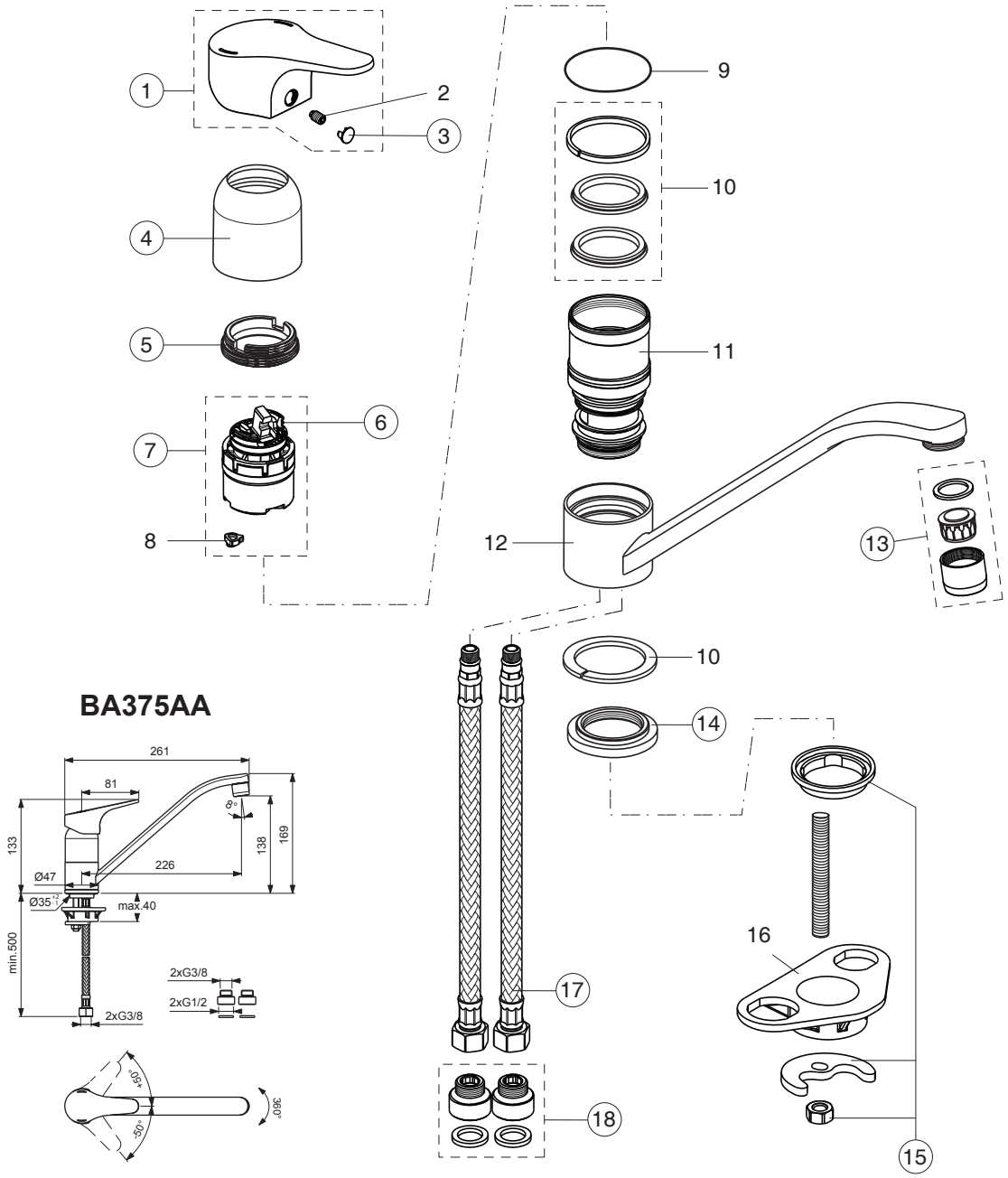

Pos.	Signify	Spare parts-Nr.	Quantity	Pos.	Signify	Spare parts-Nr.	Quantity
1	Lever,w/logo-set	B961427AA	1 Pcs.	15	Connecting set	B960432NU	1 Set
2	Screw M5x8		1 Pcs.	16	U plate support		1 Pcs.
3	Cap decorative	B960473AA	1 Pcs.		bracket fixing kit		
4	Rosette	B961431AA	1 Pcs.	17	Flex hose G3/8 /L550	A963685NU	1 Pcs.
5	Screw M41x1.5/M38x1.5	B961374NU	1 Pcs.	18	Nipple G3/8-G1/2-compl.	B961063NU	1 Set
6	Hot limit stop	A861181NU	1 Pcs.				
7	Cartridge Ø38mm	A861156NU	1 Pcs.				
8	Pin		1 Pcs.				
9	O-Ring Ø39.1x1.3		1 Pcs.				
10	Sealing set	B960784NU	1 Pcs.				
11	Manifold		1 Pcs.				
12	Body		1 Pcs.				
13	Perlator M22x1-A	B960828AA	1 Pcs.				
14	Rosette decorative	B961430AA	1 Pcs.				