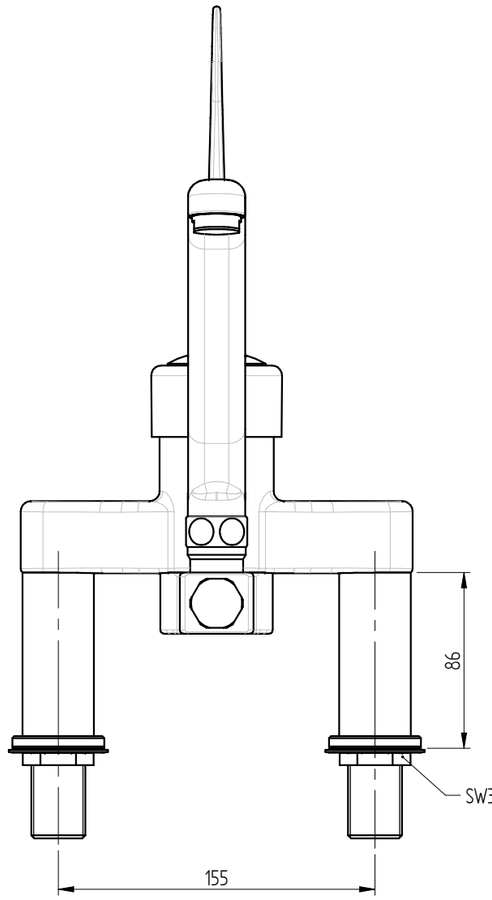

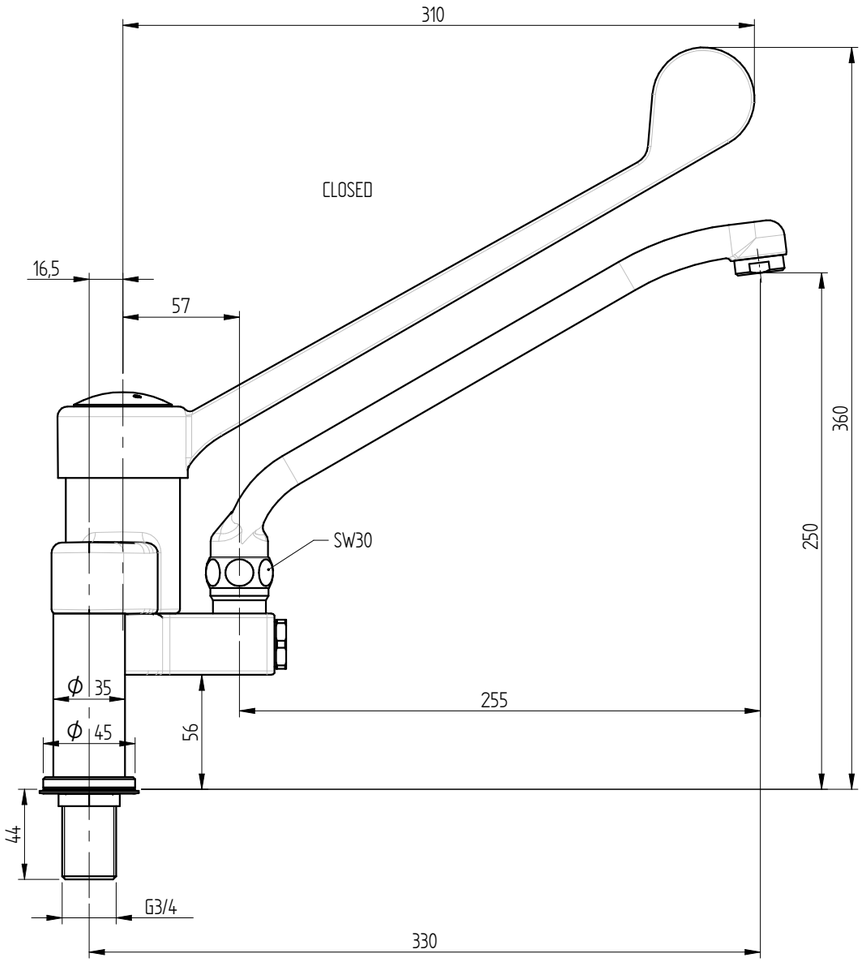

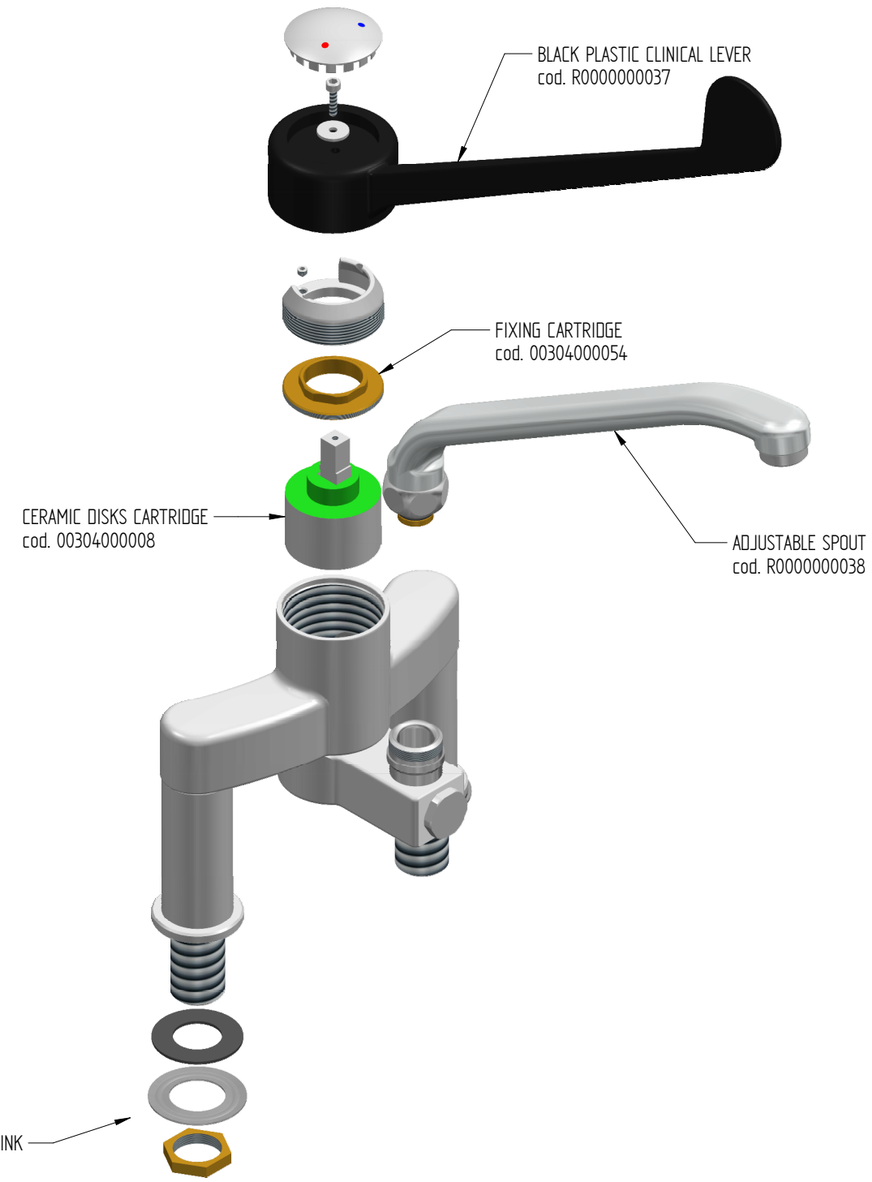

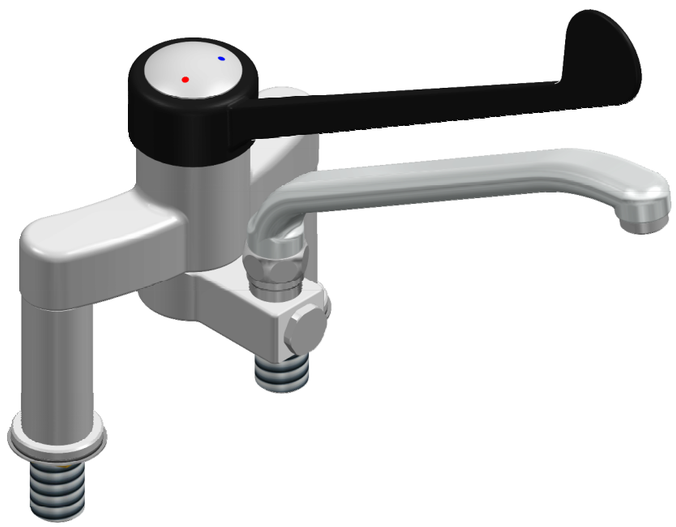

FLOW RATE : 15 L/min at 3,5 BAR

sink fixing holes : ø27 mm

Shares without tolerance according to standard **UNI-EN-22768-1-m**	DESCRIPTION		CODE
SIZE A3	European Projection	TWO HOLES MIXER SINK WITH SWINGING SPOUT AND PLASTIC (PA6) CLINICAL LEVER. 155mm WHEELBASE	R0102020206
			WEIGHT 3,86 Kg
DATE 25-09-2018	SCALE 1:3		
DRAWN PICCOLO M.			
VALIDATE PICCOLO M.			

MONOLITH
DESIGN AND TECHNOLOGICAL RESEARCH FOR WATER
VIA DELL'ARTIGIANO 8/F-8-G , 31050 MONASTIER di TREVISO (TV) tel: 0422 842157 - fax: 0422 708978

DONE WITH DESIGN CAD - PROHIBITED THE CHANGES MANUAL

Rev. 00