References for preparation of the connections
WASHLET™ RX TCF794CG
WASHLET™ SX TCF796CG

Before installation, be sure to read the installation manual and the separate safety precautions sheet.

Default connection positions

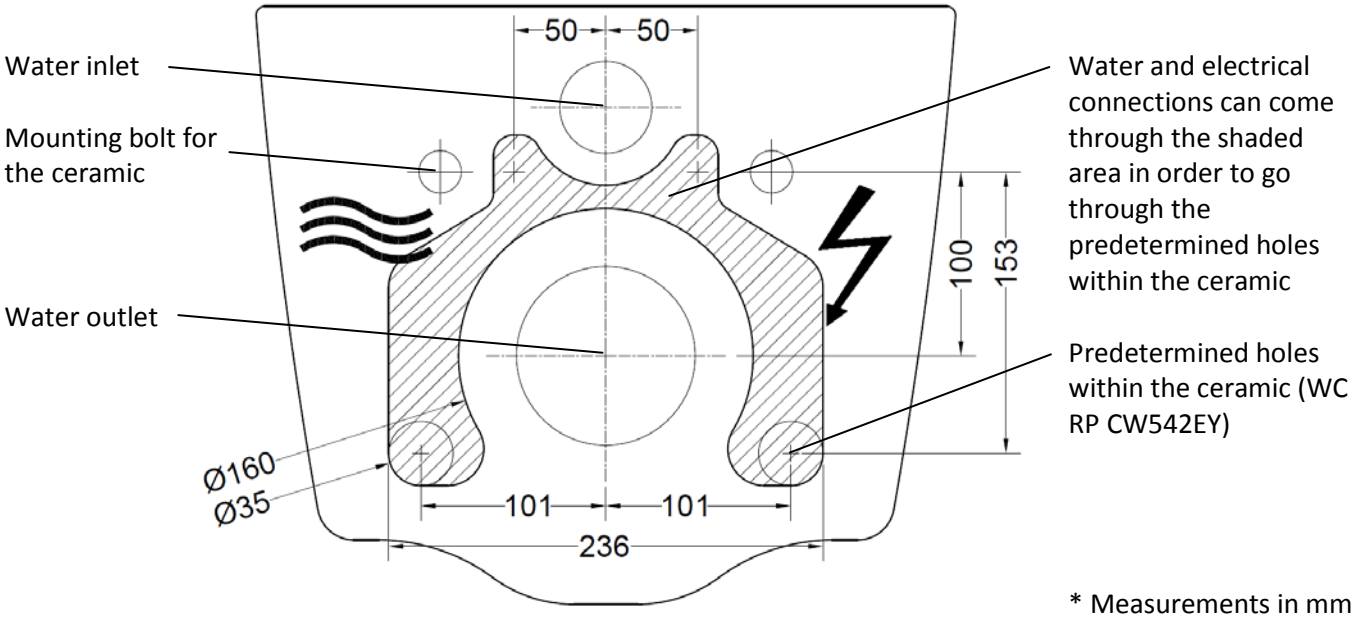

* Measurements in mm

To be provided on site

Water connection
- Flexible cold water connection 460 mm (flexible hose)
- Cold water supply finishing with stop valve 3/8” male connection (not included) to connect to the WASHLET flexible hose 3/8” female
- Pressure min. 0,1 MPa (dynamic)
  Pressure max. 1,0 MPa (static)

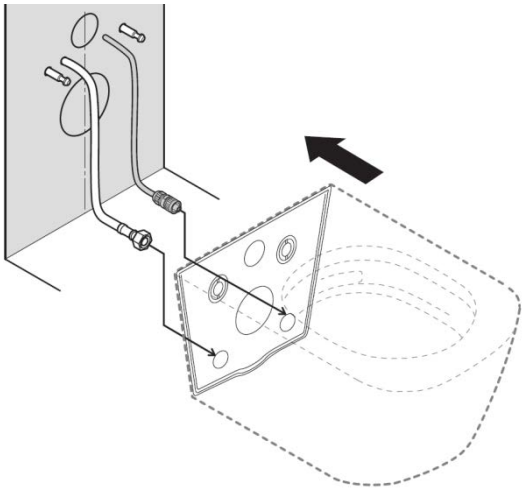

Electrical connection
- Flexible power cord 400 mm, H05VV-F 3G1.00mm²
- Hirschmann electrical connector (included)
- Power supply 220 – 240 V ~ 50/60 Hz
- Max. Power rating 1451 W

Prepare the connection within the above specified area.

We suggest using the TOTO connecting set SP10695UR for installation frame for WASHLET GL 2.0 and WASHLET EK 2.0 with hidden connections to prepare the water connection on Geberit frames with empty conduit (located on the left hand side 50 mm from the center of the frame at the same height as the fixation bolts).

Install a power source circuit cutoff device (according to IEC 60335-1).

Install a Residual Current Circuit Breaker (RCCB) (I_N = 30 mA) that disconnects all phases from mains.

2018/10